# Convection Oven

Owner's Manual

**Models**
M42004

This manual includes material related to installation, use, cleaning, and care. All available parts list[s], wiring diagrams, or specifications pertaining to the unit covered by this manual are also included.

This manual must be read and understood by all persons using or installing this appliance. Contact your Wells dealer if you have any questions concerning installation, use, or maintenance of this equipment. This manual is for the exclusive use of licensees and employees of McDonald's Corporation as well as employees of Wells Manufacturing.

**DO NOT DISCARD THIS MANUAL.**

M42004

2M-Z19624 • Rev. C • 02.2018

## LIMITED EQUIPMENT WARRANTY

Wells Manufacturing warranties new M42004 ovens to be free from defects in material and/or workmanship for a period of three [3] years from the date of original installation, except as noted below. Defects that occur as a result of any normal use or function, within the time period and limitations defined in this warranty, will at Wells' discretion have the parts replaced or repaired by Wells or a Wells-authorized service agency.

**THIS WARRANTY IS SUBJECT TO ALL LISTED CONDITIONS.**

Repairs performed under this warranty are to be performed by a Wells-authorized service agency. Wells will not be responsible for charges incurred or service performed by non-authorized repair agencies. In all cases, the nearest Wells-authorized service agency must be used.

Wells will be responsible for normal labor charges incurred in the repair or replacement of a warrantied product within 50 miles (80.5 km) of an authorized service agency. Time and expense charges for anything beyond that distance will be the responsibility of the owner. All labor will need to be performed during regular service hours. Any overtime premium will be charged to the owner. For all shipments outside the U.S.A. and Canada, please see the International Warranty for specific details.

It is the responsibility of the owner to inspect and report any shipping damage claims, hidden or otherwise, promptly following delivery.

No mileage or travel charges will be honored on any equipment that is deemed portable. In general, equipment with a cord and plug weighing less than 50 lb. (22.7 kg) is considered portable and should be taken or shipped to the closest authorized service agency, transportation prepaid.

### CONTACT

Should you require any assistance regarding the operation or maintenance of any Wells equipment; write, phone, fax or email our service department. In all correspondence mention the model number and the serial number of your unit, as well as the voltage or type of gas you are using.

Business hours are 8:00 a.m. to 4:30 p.m. Central Standard Time
Telephone 314.678.6314
Fax 314.781.2714
Email customerservice@star-mfg.com
www.wells-mfg.com

### WARRANTY EXCLUSIONS

THE FOLLOWING WILL NOT BE COVERED UNDER WARRANTY.

- Any product which has not been installed, cleaned, maintained, or used in accordance with the directions published in the appropriate installation sheet and/or owner's manual as well as national and local codes, including incorrect gas or electrical connection. Wells is not liable for any unit which has been mishandled, abused, misapplied, subjected to chlorides, harsh chemicals, or caustic cleaners, damaged from exposure to hard water, modified by unauthorized personnel, damaged by flood, fire, or other acts of nature [or God], or which have an altered or missing serial number.
- Installation, labor, and job checkouts, calibration of heat controls, air and gas burner/bypass/pilot adjustments, gas or electrical system checks, voltage and phase conversions, cleaning of equipment, or seasoning of griddle surface.
- Replacement of fuses or resetting of circuit breakers, safety controls, or reset buttons.
- Replacement of broken or damaged glass components, quartz heating elements, and light bulbs.
- Labor charges for all removable parts in gas charbroilers and hotplates, including but not limited to burners, grates, and radiants.
- Any labor charges incurred by delays, waiting time, or operating restrictions that hinder a service technician's ability to perform service.
- Replacement of items subject to normal wear or items that can easily be replaced during a daily cleaning routine, such as but not limited to knobs, bulbs, fuses, quartz heating elements, baskets, racks, and grease drawers.
- Components that should be replaced when damaged or worn, but have been field-repaired instead [eg. field-welded fry pots].
- Any loss of business or profits.

### ADDITIONAL WARRANTIES

Specialty/chain specific versions may also have additional and/or extended warranties.

| PRODUCTS | PARTS | LABOR |
|---|---|---|
| universal ventless hoods | 2 years | 1 year |
| canopy hoods | 2 years | 1 year |
| "Cook'n Hold" equipment [HW10, HWSMP, LLSC7, LLSC7WA, LLSC11, and LLSC11WA] | 2 years | 1 year |
| cast iron grates, burners, and burner shields | 1 year | |
| original Wells parts sold to repair Wells equipment | 90 days | |
| Service First | 1 year | |

**The foregoing warranty is in lieu of any and all other warranties expressed or implied and constitutes the entire warranty.**

## TABLE OF CONTENTS


| | |
|---|---|
| Warranty | i |
| Specifications | iii |
| General Information | 1 |
| Safety Information | 2 |
| Installation Information | 3 |
| Oven Component Overview | 4–5 |
| Cleaning | 6–7 |
| Temperature  Calibration | 8 |
| Troubleshooting | 9 |
| Daily Operation | 10–11 |
| U.S.A. Market Menu Items | 12–14 |
| Canada Market Menu Items | 15 |
| 208 V and 240 V Single Phase Wiring Diagram | 18 |
| 208 V and 240 V Three Phase (Delta) Wiring Diagram | 19 |
| 230 V Three (Wye) Phase Wiring Diagram | 20 |
| Hinge Adjustment | 21 |
| Exploded Views | 22–23 |
| Parts List | 24–26 |
| Optional Equipment Setup | 27 |


2M-ZI9624 Rev C Owner's Manual for M42004 Convection Oven

## SPECIFICATIONS

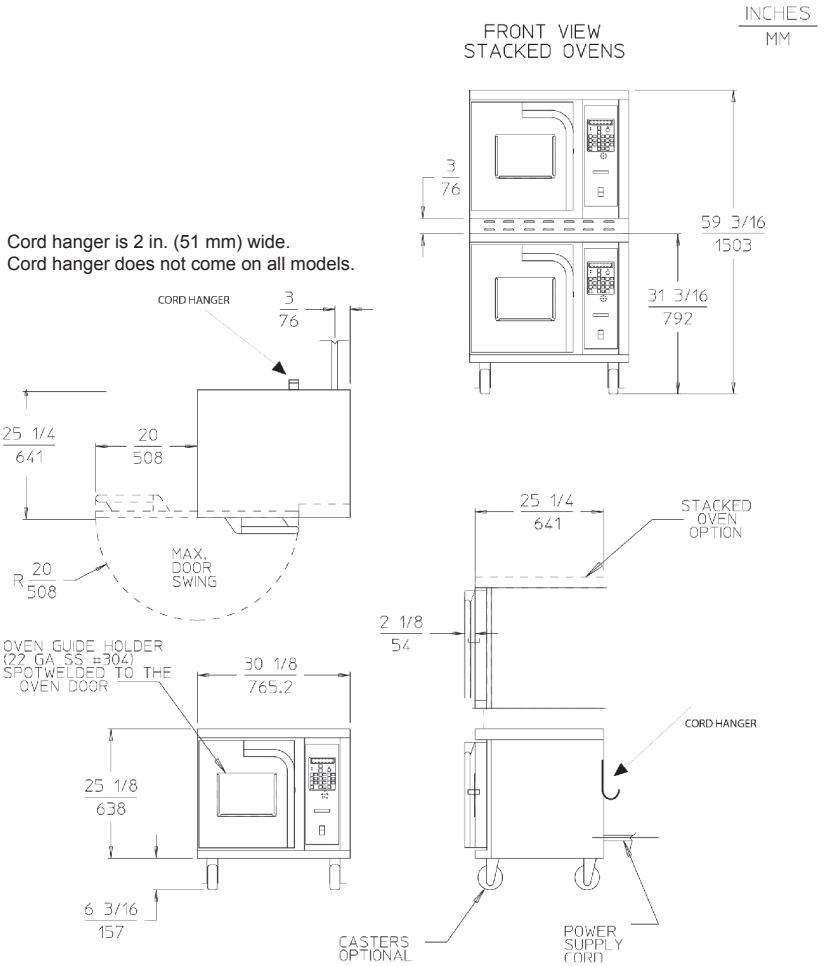


| Model Number 1Ø | W x D x H (height without casters) | Voltage & Phase | Watts | Amps Single Phase | HP | PLUG | Weight (Shipping) |
|---|---|---|---|---|---|---|---|
| M42004 | 30-1/8” x 27-1/4” x 25-1/8”<br>765mm x 692mm x 639mm | 208V 1Ø<br>240V 1Ø | 7500<br>8400 | 38<br>37 | 1/4 | varies by model version | 253lbs<br>115kg |

| Model Number 3Ø | W x D x H (height without casters) | Voltage & Phase | Watts | Amps Per Line L1 L2 L3 | HP | PLUG | Weight (Shipping) |
|---|---|---|---|---|---|---|---|
| M42004 | 30-1/8” x 27-1/4” x 25-1/8”<br>765mm x 692mm x 639mm | 208V 3Ø<br>240V 3Ø | 7500<br>8400 | 21 21 21<br>21 21 21 | 1/4 | varies by model version | 253lbs<br>115kg |
| | | 380/415 3Ø | 8400 | 12 12 12 | 1/4 | NONE | |

1 2 3

E6070 Standard 4

**1** Applies to 208/240 V North American models only.

**2** Applies to 380/415 V models only.

**3** Complies to NSF 4 only if installed and maintained as instructed by this manual.

## SAFETY SYMBOLS

These symbols are intended to alert the user to the presence of important operating and maintenance instructions in the manual accompanying the appliance.

## THOROUGHLY INSPECT YOUR UNIT ON ARRIVAL

This unit has been tested for proper operation before leaving our plant to ensure delivery of your unit in perfect condition. However, there are instances in which the unit may be damaged in transit. In the event you discover any type of damage to your product upon receipt, you must immediately contact the transportation company who delivered the item to you and initiate your claim with that company. If this procedure is not followed, it may affect the warranty status of the unit. If damage or loss is not apparent until after equipment is unpacked, a request for inspection of concealed damage must be made with carrier within 15 days. Please record the model number, serial number, voltage, and purchase date in the area below at the time of receipt. Do not discard packaging until unit has been inspected for hidden damage and tested for proper operation.

| | | | |
|---|---|---|---|
| Model Number | _____ | Restaurant [Number/Location] | _____ |
| Serial Number | _____ | Service Company | _____ |
| Voltage | _____ | Technician | _____ |
| Purchase Date | _____ | Installation Date | _____ |

## MAINTENANCE AND REPAIRS

Contact your local authorized service agent for service or required maintenance. Please have the information in the above fields ready when you call to ensure a faster service.

Using any part other than genuine Wells factory supplied parts relieves the manufacturer of all liability. Due to periodic changes in designs, methods, procedures, policies, and regulations, the specifications contained in this document are subject to change without notice. Wells reserves the right to change product specifications and design without notice. In regards to previously purchased equipment, such revisions do not entitle the buyer to corresponding changes, improvements, additions or replacements. While Wells Manufacturing exercises good faith efforts to provide information that is accurate, we are not responsible for errors or omissions in information provided or conclusions reached as a result of using the specifications. By using the information provided, the user assumes all risks in connection with such use.

PLEASE REFER TO THE WARRANTY PAGE FOR SPECIFIC WARRANTY INFORMATION.

## AUTHORIZED SERVICE AGENT LISTING

Reference the listing provided with the unit or for an updated listing go to the website or call customer service to find an agent.

Business hours: 8:00 a.m. to 4:30 p.m. Central Standard Time
Telephone: 314-678-6314
Fax: 314-781-2714
Email: customerservice@star-mfg.com
Website: www.wells-mfg.com

## GENERAL SAFETY INFORMATION

This equipment is designed and sold for commercial use only, and is intended for use by personnel trained and experienced in its operation in order to prepare food for human consumption. This is not sold for consumer use in and around the home nor for use directly by the general public in food service locations.

Before using your new equipment, read and understand all the instructions and labels associated with the unit prior to putting it into operation. Make sure all people associated with its use understand the units operation and safety before they use the unit. If there is visible damage to any component, including the control, the unit should not be used until after the damage has been repaired. Only authorized, qualified technicians should perform repairs on this unit.

Proper cleaning and maintenance of this unit is essential to good sanitation.  Read and follow all included cleaning instructions and schedules, as well as any provided by your company, to ensure the safety of the food product and the longevity of the oven.

Use caution, the exposed surfaces of this unit can be hot to the touch and direct contact with skin may cause burns. Allow the oven to cool until it is 150° F (66° C) or less before performing any cleaning procedure.

Do not immerse the unit in water or let the unit stand in water. Do not hose down the unit or use any type of pressure or steam cleaner which would allow excess moisture to come in contact with the oven's electrical components.

## GENERAL INSTALLATION INFORMATION

Installation and start up should be performed by an authorized, qualified personnel only and must meet the requirements listed in this manual as well as any national and local codes. The oven will have to be mounted over a non-combustible surface such as concrete, ceramic tile, terrazzo, or metal. The installer is responsible for making certain all codes and other requirements are met.

Carefully remove the oven from its carton, making certain to remove all plastic film as well as any flammable components which have been placed in the oven cavity for shipping purposes. The unit is shipped with three [3] oven racks, two [2] rack supports, and one [1] fan baffle. Make certain these components as well as any optional parts [eg. casters, prep top kit, stacking kit, or vent duct] are present when unpacking the unit. Also make sure to place any components that are packed with the unit in a location where they will not be misplaced or discarded. Depending on the specific version of the unit, it will be shipped with an attached cord or ready to hardwire. In any case, the oven must be connected to an electrical connection adequate for its voltage and amp draw and in accordance with the unit's wiring diagram. If the unit does not properly power on and improper electrical supply is suspected, contact a qualified electrician prior to using the unit. Should you require assistance, contact your local authorized service agent for any service or required maintenance.

## ELECTRICAL CONNECTION

Units that come with a factory attached cord simply need to be connected to a matching receptacle rated for the proper amperage and phase. For units intended to be wired in the field, only a qualified electrician should work on connecting this oven. They should be familiar with electrical installations and all applicable electrical codes. The external wiring should be in conduit or an approved type of flexible cable suitable for operation based on the power requirements of the unit and any local or national codes. The strain relief supplied with the unit is intended for a metal conduit connection. For other types of cords, an alternate strain relief will need to be used. Ensure 3-phase delta units and 3-phase wye units are hooked up properly based on the particular unit's specific wiring requirements, as shown in that unit's wiring diagram. Improper grounding may result in personal injury or fatality. The supply circuit should be properly fused and equipped with a means of disconnecting, as required by local and federal electrical codes. Unless otherwise required, an approved all-pole power disconnect switch, with at least 0.125 in. (3 mm) contact gap is recommended and should be installed in the fixed wiring in an accessible location with close proximity to the appliance. Before any electrical connection is made to this unit, check that the power supply is adequate for the voltage, amperage, and other requirements stated on the nameplate. Make certain to disconnect the unit from the power source before performing any maintenance or service, including installing or removing any parts.

## VENTILATION

In order to cook proteins with this oven, a ventilation kit must be used and connected properly based on all local and national requirements.

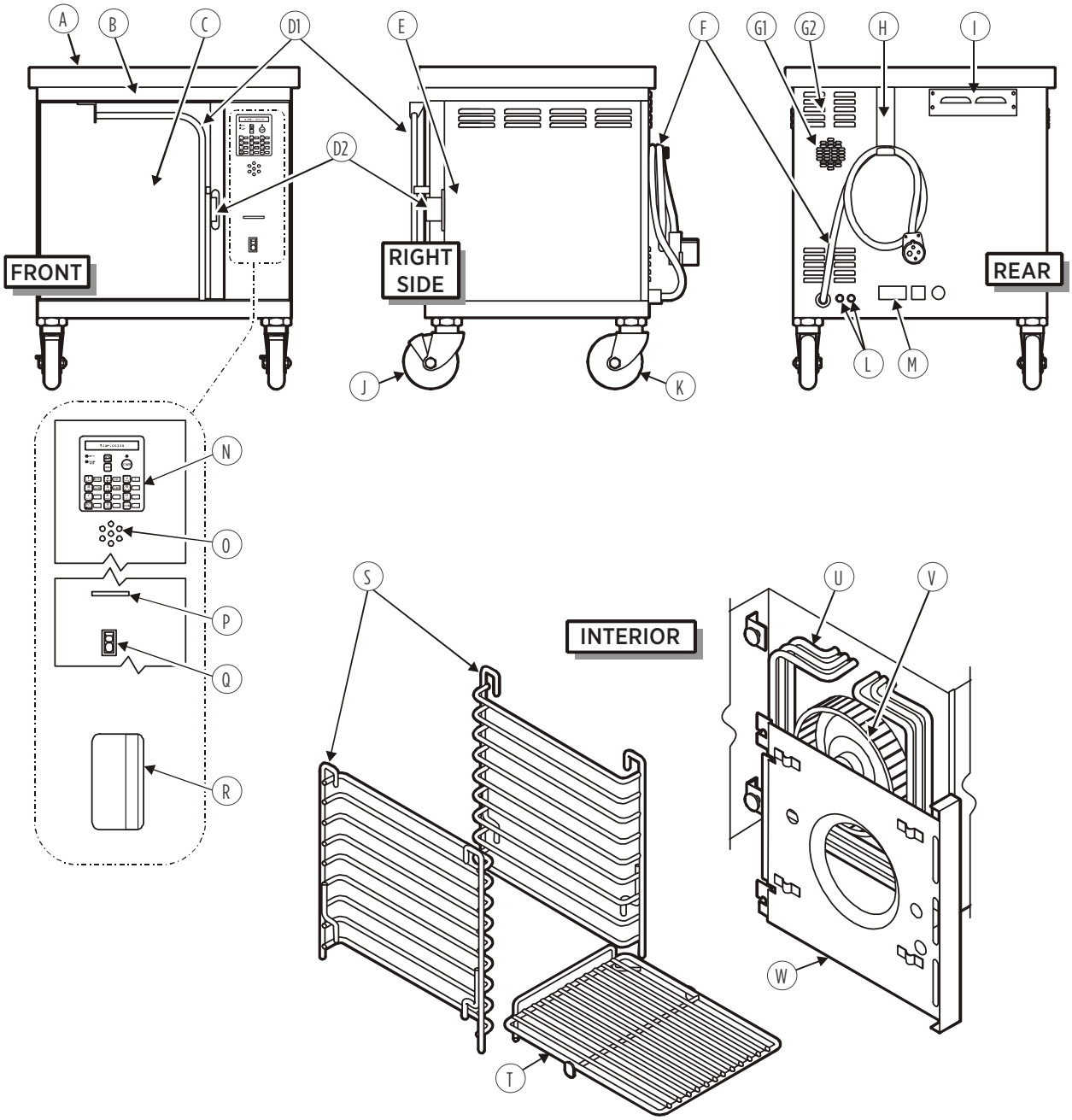
A
B
C
D1
D2
E
F
G1
G2
H
I
FRONT
RIGHT SIDE
REAR
J
K
L
M
N
O
P
Q
R
S
INTERIOR
U
V
W
T

| REF | COMPONENT | ADDITIONAL DETAILS |
|---|---|---|
| A | optional prep top | optional add-on accessory that allows the top of the oven to be used as a work surface |
| B | oven top | covers top insulation [this panel should not be used as a work surface] |
| C | oven door | front oven cavity access |
| D1 | door handle | insulated handle to allow the door to be safely opened or closed |
| D2 | door striker and latch | holds door securely closed |
| E | side panel | allows access to interior components during service<br>[excess moisture should be kept away from any opening in the body] |
| F | power cord | on applicable models only |
| G1 | cooling fan inlet | component cooling fan inlet<br>[excess moisture should be kept away from any opening in the body] |
| G2 | cooling louvers | louvers in side and rear panels allow air to move through the body of the oven to cool components<br>[excess moisture should be kept away from any opening in the body] |
| H | cord hanger | on applicable models only |
| I | cavity vent | vent out of oven cavity [vent kit and proper ventilation must be used when cooking proteins] |
| J | optional front casters | optional add-on accessory locking casters |
| K | optional rear casters | optional add-on accessory non-locking casters |
| L | fuses | protection for circuits that run from contactor/relay to power on/off switch |
| M | nameplate | shows data on model number, voltage, amperage, phase, certification[s], and serial number |
| N | control board | programmed control board with label and integrated display and speaker |
| O | speaker grille | front panel location that the speaker sound travels through |
| P | card reader | allows menu card to be used to reprogram product settings |
| Q | power on/off switch | used to power the unit on or off |
| R | menu card | stores product settings to easily and quickly reprogram control to accommodate changes to menu items |
| S | rack support | supports and locates product racks |
| T | product rack | supports product trays |
| U | heating element | energized to provide cooking heat |
| V | fan | circulates heated air for even temperature distribution |
| W | fan baffle | covers fan for safety and to direct air around oven cavity |

## CLEANING

DO NOT USE COARSE SPONGES/PADS WHICH WILL SCRATCH THE FINISH.

DO NOT USE CAUSTIC CLEANERS, DEGREASERS, FLAMMABLE CLEANERS, OR ANY OTHER CLEANER WHICH CAN DAMAGE UNIT'S SURFACE.

DO NOT IMMERSE THE UNIT IN WATER OR LET THE UNIT STAND IN WATER.

ALLOW THE OVEN TO COOL UNTIL IT IS 150° F (66° C) OR LESS BEFORE YOU PERFORM ANY CLEANING PROCEDURE.

DO NOT ALLOW ANY CLEANER OR LIQUID TO COLLECT ON THE TOP OF THE UNIT OR TO ENTER THE OVEN THROUGH THE VENTS ON THE SIDE OR REAR.

DO NOT HOSE DOWN THE UNIT OR USE ANY TYPE OF PRESSURE OR STEAM CLEANER WHICH WOULD ALLOW EXCESS MOISTURE TO COME IN CONTACT WITH THE OVEN'S ELECTRICAL COMPONENTS.

Preventive maintenance consists of the following recommended cleaning procedures. To keep your unit in its best operating condition, these steps should be performed on a regular basis as required. The cooking area must be kept clean for the unit to function properly.

### DAILY CLEANING

**RECOMMENDED SUPPLIES**

soft cloths
clean water

**PROCEDURE**

**i.** Use caution, as the oven will still be hot at this point. With the oven powered on, open the door.
**ii.** Press the "UTILITY" key. The display will now read "FAST COOL MODE" at this point.
**iii.** Press the "START" key. The display will now read "COOL DOWN" and the fan will start. Use caution at this point as the fan will be on. At no point should you attempt to reach into the oven while the fan is running.
**iv.** When the oven has cooled down, flip the power switch to the "OFF" position. At this point, unplug the unit or turn off the main power supply to the unit, depending on how the unit is connected, in order to prevent accidentally powering the unit on during cleaning.
**v.** Wipe the interior of the oven and door thoroughly with a clean, soft cloth dampened with clean water.
**vi.** Next, wipe the interior of the oven and door thoroughly with a clean, soft, dry cloth.
**vii.** Wipe the exterior, including the control panel, with a clean, soft, dry cloth. Do not use a damp cloth on the control or on any exterior panel that will allow moisture to enter the oven body or come into contact with any electrical components.

## MONTHLY CLEANING

### RECOMMENDED SUPPLIES

soft cloths
clean water
sanitizer
mild detergent
non-scuff scouring pad
non-solvent all purpose cleaner

### PROCEDURE

i. Use caution, as the oven will still be hot at this point. With the oven powered on, open the door.
ii. Press the “UTILITY” key. The display will now read “FAST COOL MODE” at this point.
iii. Press the “START” key. The display will now read “COOL DOWN” and the fan will start. Use caution at this point as the fan will be on. At no point should you attempt to reach into the oven while the fan is running.
iv. When the oven has cooled down, flip the power switch to the “OFF” position. At this point, unplug the unit or turn off the main power supply to the unit, depending on how the unit is connected, in order to prevent accidentally powering the unit on during cleaning.
v. Carefully remove the racks, rack supports, and fan baffle from the oven, noting how each component was removed.
vi. Using a damp cloth, carefully wipe down the fan wheel. Use caution as the fan blades are sharp. Use a soft sponge to remove all loose particles.
vii. Use a non-scuff scouring pad and a non-solvent all purpose cleaner to clean the oven cavity.
viii. Next, wipe the whole interior of the oven thoroughly with a clean, soft cloth dampened with clean water.
ix. Wipe the interior of the oven and door thoroughly with a clean, soft cloth and sanitizer.
x. Clean the oven racks and rack supports in a sink or dishwasher using mild detergent.
xi. Wipe the fan baffle thoroughly with a clean, soft cloth dampened with clean water.
xii. Wipe the fan baffle thoroughly with a clean, soft cloth and sanitizer.
xiii. Carefully reinstall the fan baffle making sure not to damage the fan baffle or fan blades. Make certain the baffle is correctly aligned with tabs on the left and fully seated in the slot in the rear, right of the oven cavity.
xiv. Reapply power to the unit and power the unit on briefly to ensure the fan works properly and does not

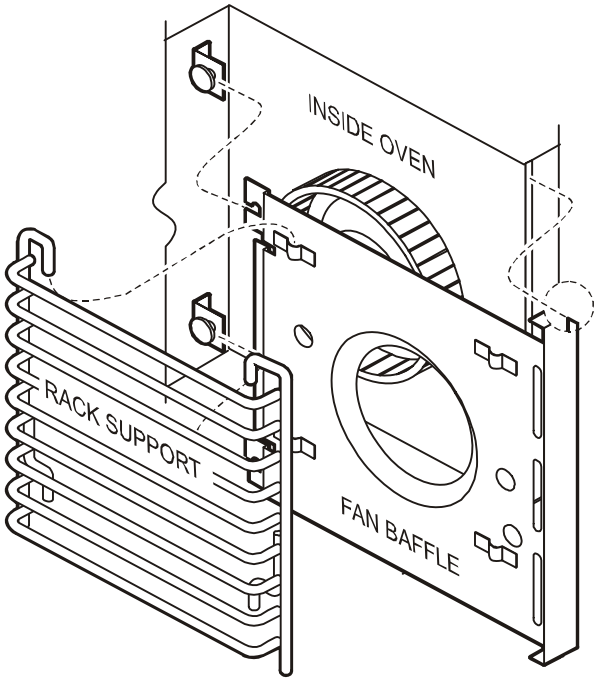

## TEMPERATURE CALIBRATION

THIS PROCEDURE SHOULD BE PERFORMED MONTHLY BY AUTHORIZED PERSONNEL ONLY.

USE CAUTION, AS THE OVEN WILL BE HOT DURING OPERATION AND MAY CAUSE SEVERE BURNS IF NOT CAREFUL.

PRESSING “CANCEL” AT ANY POINT DURING THIS CALIBRATION PROCEDURE WILL BACK OUT OF THE CURRENT SCREEN AND WILL NOT SAVE OR IMPLEMENT ANY CHANGES MADE SINCE THE LAST SAVE/UPDATE.

### RECOMMENDED SUPPLIES

calibrated digital thermometer with oven probe

### SETUP

**i.** Verify the unit is plugged in [where applicable] and that the unit has power.
**ii.** With the unit cool and off, open the door and securely clamp the probe to the center of the middle rack.
**iii.** Run the wires from the probe between the door gasket segments on the right and close the door. Plug the wire lead into the thermometer.
**iv.** Turn the power switch on and wait 30 minutes for the unit to heat up and the temperature to stabilize. Do not activate any bake cycle or cooking timer during, simply leave the oven on its default setting.

### CALIBRATION

**i.** Enter programming mode by holding the “PROG” button for 5 seconds.
**ii.** The screen will now read “TEMP CAL”. Use the “2” button to change the “NO” on the screen to “YES”.
**iii.** Press the “PROG” button again and the “CAL TEMP” screen will display, showing the current temperature of the oven in Fahrenheit and Celsius.
**iv.** Check the temperature shown on the display versus the one indicated on the thermometer connected to the oven probe. Temperature will need to be within 3° F (1° C) to be correctly calibrated. If it is correct, continue to step “**vi**” below.
**v.** If the calibration is not correct, press the “2” button to raise the temperature and the “8” button to lower it until it matches the thermometer reading. Once it matches, continue to the next step.
**vi.** Press the “PROG” button 5 times until the screen reads “UPDATING SYSTEM” at which point the calibration is complete.
**vii.** Press the “CANCEL” button to exit programming mode and return to normal operation.

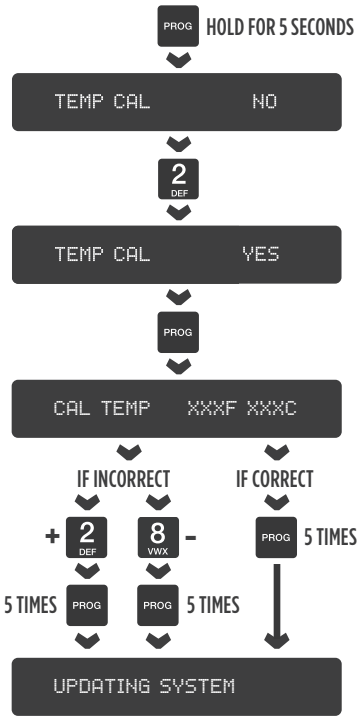

## TROUBLESHOOTING

THIS UNIT IS NOT USER SERVICEABLE. NO PERSONNEL OTHER THAN AN AUTHORIZED TECHNICIAN SHOULD ATTEMPT TO MAKE REPAIRS OR SERVICE THIS UNIT.

REMOVAL OF ANY BODY PANEL OR FUSE PRESENTS THE POSSIBILITY OF ELECTROCUTION AND SHOULD NOT BE PERFORMED WHILE THE UNIT IS CONNECTED TO ITS POWER SOURCE. THE UNIT SHOULD BE UNPLUGGED OR DISCONNECTED BEFORE ANY SERVICE IS ATTEMPTED.

IN THE CASE OF ANY PERCEIVED OR SUSPECTED DAMAGE TO ELECTRICAL WIRING OR CONNECTION, ALWAYS CONTACT AN AUTHORIZED TECHNICIAN/ELECTRICIAN IMMEDIATELY.

| SYMPTOM | POSSIBLE CAUSE | POSSIBLE SOLUTIONS / TROUBLESHOOTING STEPS |
|---|---|---|
| no power to unit | circuit breaker off or tripped | reset circuit breaker if tripped or off |
| | power cord unplugged or damaged | carefully plug in the cord if unplugged [on applicable models] or use caution and visually inspect the wiring |
| | fuse blown or loose | check fuses on the rear of the unit and correct problem by securing or replacing fuse[s] if necessary |
| oven will not heat | power to the unit is off | turn the power on and check for normal operation |
| | oven door is not closed/sealed | close oven door and if not sealed attempt to adjust door and latch to secure and seal door properly |
| | high limit has been tripped due to excessive temperature | allow the oven to cool so the high limit can reset, then check for normal operation |
| | malfunctioning control unit | contact authorized service agent to diagnose and make repairs |
| | malfunctioning heating element | contact authorized service agent to diagnose and make repairs |
| blower fan will not run | oven door not closed | close oven door and check for normal operation |
| | damage to internal components | contact authorized service agent to diagnose and make repairs |
| door pops open during cook cycle or is leaking air thorough seal | latch is out of adjustment | tighten door latch screws and check door adjustment |
| | door is out of adjustment | adjust door and check to make sure latch screws are tight |
| product not baking properly | incorrect temperature calibration | perform calibration procedure |
| | incorrect product programming | correct product programming based on applicable product menu chart |
| ERROR CODES | | |
| error code <HTR ERROR> displayed at start-up | a fault has been detected in one of the heating elements | contact authorized service agent to diagnose and make repairs |
| error code <MTR ERROR> displayed at start-up | a fault has been detected in the fan motor | contact authorized service agent to diagnose and make repairs |

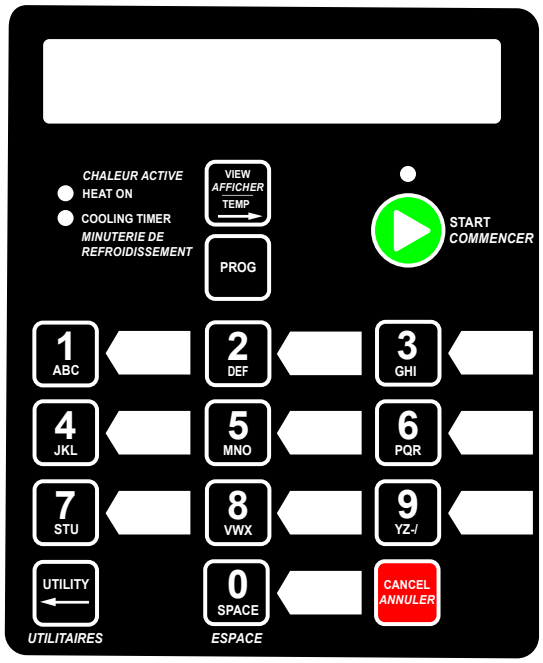


## DAILY OPERATION

THIS PROCEDURE SHOULD BE PERFORMED MONTHLY BY AUTHORIZED PERSONNEL ONLY.

USE CAUTION, SOME SURFACES ARE EXTREMELY HOT DURING OPERATION AND CARE SHOULD BE TAKEN WHILE USING THIS UNIT. ONLY TOUCH THE DOOR BY THE HANDLE DURING OPERATION AND ALWAYS USE AN APPROPRIATE PROTECTIVE MITT WHEN PLACING ITEMS INTO, OR REMOVING ITEMS FROM, THE OVEN.

DO NOT REACH INTO THE OVEN CAVITY WHEN THE UNIT IS RUNNING AS THE FAN BLADES ARE VERY SHARP.

MAKE CERTAIN TO READ ALL INSTRUCTIONS AND WARNINGS CONTAINED WITHIN THIS MANUAL IN FULL, PRIOR TO USE.

### DAILY SETUP

**i.** With the power supply connected, turn the power switch to the on position. The control panel will beep twice and the display will flash the Wells name.

**ii.** By default, the “1” button will be selected when starting up the oven, meaning the oven will target the temperature and run the fan at the speed associated with the first bake stage of that product. In this case, “FULL BISCUIT” is the product set to the “1” button, which mean the temperature will be set at 375° F (190° C).

**iii.** The display will read “TOO COOL” until the temperature reaches the set point, 375° F (190° C) in the case of this product. The “HEAT ON” light will be illuminated continuously until the oven reaches its set point, and will also illuminate intermittently as the oven maintains temperature. The actual temperature and set point can be viewed by holding the “VIEW/TEMP” button for 5 seconds.

**iv.** The display will show that the product is “READY” once the oven reaches the set point.

## COOK CYCLE

**i.** Once the oven has come up to operating temperature, slide trays onto the appropriate rack supports. The oven is set to accommodate up to three [3] trays and to operate properly, the product trays must be set in specific locations.

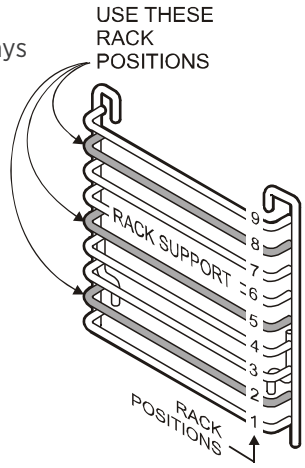


| NUMBER OF PRODUCT TRAYS | RACK POSITIONS TO USE |
|---|---|
| 1 | 5 |
| 2 | 2 and 8 |
| 3 | 2, 5, and 8 |

**ii.** Close the door once the trays are correctly loaded and immediately press the appropriate product button once. If there is only one partial tray [eg. 1/2 or 1/4 tray], quickly press the appropriate product button a second time.

**iii.** The display will now show the product and cook time [eg. “BISCUITS 3:00”]. Press the “START” button at this point to begin cooking and start the timer. If the system sits on a product selection without pressing the “START” button for 5 seconds, the oven will return to the “READY” status.

**iv.** If it is necessary to interrupt the cook cycle, it can be done temporarily by opening the door, which will pause the cook timer. The timer will resume the countdown once the door has been closed. Be aware, leaving the door open for any significant amount of time will lower the oven temperature and may negatively affect the quality of the cooked product. To completely cancel the cook cycle and return to the “READY” status, simply hold the “CANCEL” button for 5 seconds.

**v.** At the end of the cook cycle, a continuous tone will sound and a “REMOVE” message will appear on the display. Opening the door will stop the tone. Always use an appropriate oven mitt when removing product from the oven. Product should be removed as soon as safely possible after the cook cycle has finished to avoid overcooking, unless otherwise instructed. Do not leave the oven door open after removing product tray[s].

**vi.** Products with an enabled coooling timer should remain on trays until the cooling timer has finished counting down. Otherwise be careful of hot trays and product and follow instuctions provided by McDonald’s pertaining to handling product.

## CORE MARKET [U.S.A.]

| BUTTON # | PRODUCT "DISPLAYED NAME" | McDONALD'S PRODUCT FACTORY DEFAULT SETTINGS | | | | | | | | SCALE FACTORS | | |
|---|---|---|---|---|---|---|---|---|---|---|---|---|
| BUTTON 1 | FULL BISCUIT | ENABLED | CANCEL | NUMBER OF STAGES | COOK TIME | COOK TEMP | M4200-4 FAN SPEED | COOLING TIMER | COOLING TIME | FACTOR | VALUE | TIME |
| | BASE TIME 5 MINUTES | YES | A/M MANUAL | 1 | 05:00 | 375 F / 190 C | HIGH | NO | 10:00 | 1 | 00000 | 120S |
| | | | | | | | | | | 2 | 00000 | 120S |
| | | | | | | | | | | 3 | 00000 | 120S |
| | | | | | | | | | | 4 | 00000 | 120S |
| | | | | | | | | | | 5 | 00000 | 120S |
| BUTTON 2 | COOKIES | ENABLED | CANCEL | NUMBER OF STAGES | COOK TIME | COOK TEMP | FAN SPEED | COOLING TIMER | COOLING TIME | FACTOR | VALUE | TIME |
| | BASE TIME 2 MINUTES | YES | A/M MANUAL | 1 | 02:00 | 375 F / 190 C | HIGH | NO | 10:00 | 1 | 00000 | 060S |
| | | | | | | | | | | 2 | 00000 | 060S |
| | | | | | | | | | | 3 | 00000 | 060S |
| | | | | | | | | | | 4 | 00000 | 060S |
| | | | | | | | | | | 5 | 00000 | 060S |
| BUTTON 3 | FULL PIES | ENABLED | CANCEL | NUMBER OF STAGES | COOK TIME | COOK TEMP | FAN SPEED | COOLING TIMER | COOLING TIME | FACTOR | VALUE | TIME |
| | BASE TIME 12 MINUTES | YES | A/M MANUAL | 1 | 12:00 | 375 F / 190 C | HIGH | NO | 10:00 | 1 | 00000 | 120S |
| | | | | | | | | | | 2 | 00000 | 120S |
| | | | | | | | | | | 3 | 00000 | 120S |
| | | | | | | | | | | 4 | 00000 | 120S |
| | | | | | | | | | | 5 | 00000 | 120S |
| BUTTON 4 | PARTIALBISCU | ENABLED | CANCEL | NUMBER OF STAGES | COOK TIME | COOK TEMP | FAN SPEED | COOLING TIMER | COOLING TIME | FACTOR | VALUE | TIME |
| | BASE TIME 3:30 MINUTES | YES | A/M MANUAL | 1 | 03:30 | 375 F / 190 C | HIGH | NO | 10:00 | 1 | 00000 | 120S |
| | | | | | | | | | | 2 | 00000 | 120S |
| | | | | | | | | | | 3 | 00000 | 120S |
| | | | | | | | | | | 4 | 00000 | 120S |
| | | | | | | | | | | 5 | 00000 | 120S |
| BUTTON 5 | McGRIDDLES | ENABLED | CANCEL | NUMBER OF STAGES | COOK TIME | COOK TEMP | FAN SPEED | COOLING TIMER | COOLING TIME | FACTOR | VALUE | TIME |
| | BASE TIME 7 MINUTES | YES | A/M MANUAL | 1 | 07:00 | 375 F / 190 C | HIGH | NO | 10:00 | 1 | 00000 | 120S |
| | | | | | | | | | | 2 | 00000 | 120S |
| | | | | | | | | | | 3 | 00000 | 120S |
| | | | | | | | | | | 4 | 00000 | 120S |
| | | | | | | | | | | 5 | 00000 | 120S |
| BUTTON 6 | PARTIAL PIES | ENABLED | CANCEL | NUMBER OF STAGES | COOK TIME | COOK TEMP | FAN SPEED | COOLING TIMER | COOLING TIME | FACTOR | VALUE | TIME |
| | BASE TIME 10 MINUTES | YES | A/M MANUAL | 1 | 10:00 | 375 F / 190 C | HIGH | NO | 10:00 | 1 | 00000 | 120S |
| | | | | | | | | | | 2 | 00000 | 120S |
| | | | | | | | | | | 3 | 00000 | 120S |
| | | | | | | | | | | 4 | 00000 | 120S |
| | | | | | | | | | | 5 | 00000 | 120S |
| BUTTON 7 | LTO | ENABLED | CANCEL | NUMBER OF STAGES | COOK TIME | COOK TEMP | FAN SPEED | COOLING TIMER | COOLING TIME | FACTOR | VALUE | TIME |
| | BASE TIME 0 MINUTES | NO | A/M MANUAL | 1 | 00:00 | 375 F / 190 C | HIGH | NO | 10:00 | 1 | 00000 | 120S |
| | | | | | | | | | | 2 | 00000 | 120S |
| | | | | | | | | | | 3 | 00000 | 120S |
| | | | | | | | | | | 4 | 00000 | 120S |
| | | | | | | | | | | 5 | 00000 | 120S |
| BUTTON 8 | LTO | ENABLED | CANCEL | NUMBER OF STAGES | COOK TIME | COOK TEMP | FAN SPEED | COOLING TIMER | COOLING TIME | FACTOR | VALUE | TIME |
| | BASE TIME 0 MINUTES | NO | A/M MANUAL | 1 | 00:00 | 375 F / 190 C | HIGH | NO | 10:00 | 1 | 00000 | 120S |
| | | | | | | | | | | 2 | 00000 | 120S |
| | | | | | | | | | | 3 | 00000 | 120S |
| | | | | | | | | | | 4 | 00000 | 120S |
| | | | | | | | | | | 5 | 00000 | 120S |
| BUTTON 9 | LTO | ENABLED | CANCEL | NUMBER OF STAGES | COOK TIME | COOK TEMP | FAN SPEED | COOLING TIMER | COOLING TIME | FACTOR | VALUE | TIME |
| | BASE TIME 0 MINUTES | NO | A/M MANUAL | 1 | 00:00 | 375 F / 190 C | HIGH | NO | 10:00 | 1 | 00000 | 120S |
| | | | | | | | | | | 2 | 00000 | 120S |
| | | | | | | | | | | 3 | 00000 | 120S |
| | | | | | | | | | | 4 | 00000 | 120S |
| | | | | | | | | | | 5 | 00000 | 120S |
| BUTTON 0 | LTO | ENABLED | CANCEL | NUMBER OF STAGES | COOK TIME | COOK TEMP | FAN SPEED | COOLING TIMER | COOLING TIME | FACTOR | VALUE | TIME |
| | BASE TIME 0 MINUTES | NO | A/M MANUAL | 1 | 00:00 | 375 F / 190 C | HIGH | NO | 10:00 | 1 | 00000 | 120S |
| | | | | | | | | | | 2 | 00000 | 120S |
| | | | | | | | | | | 3 | 00000 | 120S |
| | | | | | | | | | | 4 | 00000 | 120S |
| | | | | | | | | | | 5 | 00000 | 120S |

## SCRATCH BISCUIT MARKET [U.S.A.]

| BUTTON # | PRODUCT "DISPLAYED NAME" | McDONALD'S PRODUCT FACTORY DEFAULT SETTINGS | | | | | | | | SCALE FACTORS | | |
|---|---|---|---|---|---|---|---|---|---|---|---|---|
| BUTTON 1 | FULL BISCUITS | ENABLED | CANCEL | NUMBER OF STAGES | COOK TIME | COOK TEMP | M4200-4 FAN SPEED | COOLING TIMER | COOLING TIME | FACTOR | VALUE | TIME |
| | BASE TIME 11:30 MINUTES | YES | A/M MANUAL | 1 | 11:30 | 375 F / 190 C | HIGH | NO | 10:00 | 1 | 00050 | 060S |
| | | | | | | | | | | 2 | 00030 | 120S |
| | | | | | | | | | | 3 | 00000 | 120S |
| | | | | | | | | | | 4 | 00000 | 120S |
| | | | | | | | | | | 5 | 00000 | 120S |
| BUTTON 2 | COOKIES | ENABLED | CANCEL | NUMBER OF STAGES | COOK TIME | COOK TEMP | FAN SPEED | COOLING TIMER | COOLING TIME | FACTOR | VALUE | TIME |
| | BASE TIME 2 MINUTES | YES | A/M MANUAL | 1 | 02:00 | 375 F / 190 C | HIGH | NO | 10:00 | 1 | 00000 | 060S |
| | | | | | | | | | | 2 | 00000 | 060S |
| | | | | | | | | | | 3 | 00000 | 060S |
| | | | | | | | | | | 4 | 00000 | 060S |
| | | | | | | | | | | 5 | 00000 | 060S |
| BUTTON 3 | FULL PIES | ENABLED | CANCEL | NUMBER OF STAGES | COOK TIME | COOK TEMP | FAN SPEED | COOLING TIMER | COOLING TIME | FACTOR | VALUE | TIME |
| | BASE TIME 12 MINUTES | YES | A/M MANUAL | 1 | 12:00 | 375 F / 190 C | HIGH | NO | 10:00 | 1 | 00000 | 120S |
| | | | | | | | | | | 2 | 00000 | 120S |
| | | | | | | | | | | 3 | 00000 | 120S |
| | | | | | | | | | | 4 | 00000 | 120S |
| | | | | | | | | | | 5 | 00000 | 120S |
| BUTTON 4 | PARTIALBISCU | ENABLED | CANCEL | NUMBER OF STAGES | COOK TIME | COOK TEMP | FAN SPEED | COOLING TIMER | COOLING TIME | FACTOR | VALUE | TIME |
| | BASE TIME 9:30 MINUTES | YES | A/M MANUAL | 1 | 09:30 | 375 F / 190 C | HIGH | NO | 10:00 | 1 | 00000 | 120S |
| | | | | | | | | | | 2 | 00000 | 120S |
| | | | | | | | | | | 3 | 00000 | 120S |
| | | | | | | | | | | 4 | 00000 | 120S |
| | | | | | | | | | | 5 | 00000 | 120S |
| BUTTON 5 | McGRIDDLES | ENABLED | CANCEL | NUMBER OF STAGES | COOK TIME | COOK TEMP | FAN SPEED | COOLING TIMER | COOLING TIME | FACTOR | VALUE | TIME |
| | BASE TIME 7 MINUTES | YES | A/M MANUAL | 1 | 07:00 | 375 F / 190 C | HIGH | NO | 10:00 | 1 | 00000 | 120S |
| | | | | | | | | | | 2 | 00000 | 120S |
| | | | | | | | | | | 3 | 00000 | 120S |
| | | | | | | | | | | 4 | 00000 | 120S |
| | | | | | | | | | | 5 | 00000 | 120S |
| BUTTON 6 | PARTIAL PIES | ENABLED | CANCEL | NUMBER OF STAGES | COOK TIME | COOK TEMP | FAN SPEED | COOLING TIMER | COOLING TIME | FACTOR | VALUE | TIME |
| | BASE TIME 10 MINUTES | YES | A/M MANUAL | 1 | 10:00 | 375 F / 190 C | HIGH | NO | 10:00 | 1 | 00000 | 120S |
| | | | | | | | | | | 2 | 00000 | 120S |
| | | | | | | | | | | 3 | 00000 | 120S |
| | | | | | | | | | | 4 | 00000 | 120S |
| | | | | | | | | | | 5 | 00000 | 120S |

## LTO [U.S.A.]

| BUTTON # | PRODUCT "DISPLAYED NAME" | McDONALD'S PRODUCT FACTORY DEFAULT SETTINGS | | | | | | | | SCALE FACTORS | | |
|---|---|---|---|---|---|---|---|---|---|---|---|---|
| LTO MARKET CHOICE | MOZZ STICKS | ENABLED | CANCEL | BAKE STAGES | COOK TIME | COOK TEMP | FAN SPEED | COOLING TIMER | COOLING TIME | FACTOR | VALUE | TIME |
| | BASE TIME 5 MINUTES | YES | A/M MANUAL | 1 | 05:00 | 375 F / 190 C | HIGH | NO | 10:00 | 1 | 00000 | 120S |
| | | | | | | | | | | 2 | 00000 | 120S |
| | | | | | | | | | | 3 | 00000 | 120S |
| | | | | | | | | | | 4 | 00000 | 120S |
| | | | | | | | | | | 5 | 00000 | 120S |
| LTO MARKET CHOICE | COFFEE CAKES | ENABLED | CANCEL | BAKE STAGES | COOK TIME | COOK TEMP | FAN SPEED | COOLING TIMER | COOLING TIME | FACTOR | VALUE | TIME |
| | BASE TIME 12 MINUTES | YES | A/M MANUAL | 1 | 08:00 | 375 F / 190 C | HIGH | NO | 10:00 | 1 | 00000 | 120S |
| | | | | | | | | | | 2 | 00000 | 120S |
| | | | | | | | | | | 3 | 00000 | 120S |
| | | | | | | | | | | 4 | 00000 | 120S |
| | | | | | | | | | | 5 | 00000 | 120S |

## MUFFINS [U.S.A.]

Your oven must have been purchased after January 2015 or have been upgraded with upgrade kit number SF-MSB-KIT to have the capability for muffin baking.

| BUTTON # | PRODUCT "DISPLAYED NAME" | McDONALD'S PRODUCT FACTORY DEFAULT SETTINGS | | | | | | | | SCALE FACTORS | | |
|---|---|---|---|---|---|---|---|---|---|---|---|---|
| LTO MARKET CHOICE | MUFFINS | ENABLED | CANCEL | BAKE STAGES | COOK TIME | COOK TEMP | FAN SPEED | COOLING TIMER | COOLING TIME | FACTOR | VALUE | TIME |
| | BASE TIME 47 MINUTES | YES | A/M MANUAL | 3 | 00:30 | 380 F / 193 C | LOW | NO | 10:00 | 1 | 00000 | 120S |
| | | | | | | | | | | 2 | 00000 | 120S |
| | | | | | 20:00 | 305F / 152 C | LOW/HTR | | | 3 | 00000 | 120S |
| | | | | | | | | | | 4 | 00000 | 120S |
| | | | | | 26:30 | 320F / 160 C | LOW | | | 5 | 00000 | 120S |

# NOTES

# CORE MARKET [CANADA]

| BUTTON # BOUTON # | PRODUCT "DISPLAYED NAME" PRODUIT "NOM AFFICHÉ" | MCDONALD'S PRODUCT FACTORY DEFAULT SETTINGS MCDONALD'S PRODUIT PARAMÈTRE D'USINE | | | | | | | | SCALE FACTORS ÉLÉMENTS DE GAMME | | |
|---|---|---|---|---|---|---|---|---|---|---|---|---|
| BUTTON 1 BOUTON 1 | FULL BISCUIT | ENABLED | CANCEL | NUMBER OF STAGES | COOK TIME | COOK TEMP | FAN SPEED | COOLING TIMER | COOLING TIME | SFACTOR | VALUE | TIME |
| | BASE TIME 5:00 MINUTES | YES | A/M MANUAL | 1 | 5:00 | 375 F / 190 C | HIGH | NO | 10:00 | 1 | 0 | 120 |
| | | | | | | | | | | 2 | 0 | 120 |
| | | | | | | | | | | 3 | 0 | 120 |
| | | | | | | | | | | 4 | 0 | 120 |
| | | | | | | | | | | 5 | 0 | 120 |
| BUTTON 2 BOUTON 2 | NEW BAGEL | ENABLED | CANCEL | NUMBER OF STAGES | COOK TIME | COOK TEMP | FAN SPEED | COOLING TIMER | COOLING TIME | SFACTOR | VALUE | TIME |
| | BASE TIME 4:30 MINUTES | YES | A/M MANUAL | 1 | 4:30 | 400 F / 204 C | LOW | NO | 10:00 | 1 | 0 | 60 |
| | | | | | | | | | | 2 | 0 | 60 |
| | | | | | | | | | | 3 | 0 | 60 |
| | | | | | | | | | | 4 | 0 | 60 |
| | | | | | | | | | | 5 | 0 | 60 |
| BUTTON 3 BOUTON 3 | PIES | ENABLED | CANCEL | NUMBER OF STAGES | COOK TIME | COOK TEMP | FAN SPEED | COOLING TIMER | COOLING TIME | SFACTOR | VALUE | TIME |
| | BASE TIME 13:00 MINUTES | YES | A/M MANUAL | 1<br>2<br>3 | 0:05<br>7:55<br>5:00 | 375 F / 190 C<br>400 F / 204 C<br>350 F / 177 C | HIGH<br>HIGH<br>LOW | NO | 10:00 | 1 | 0 | 120 |
| | | | | | | | | | | 2 | 0 | 120 |
| | | | | | | | | | | 3 | 0 | 120 |
| | | | | | | | | | | 4 | 0 | 120 |
| | | | | | | | | | | 5 | 0 | 120 |
| BUTTON 4 BOUTON 4 | COOKIES | ENABLED | CANCEL | NUMBER OF STAGES | COOK TIME | COOK TEMP | FAN SPEED | COOLING TIMER | COOLING TIME | SFACTOR | VALUE | TIME |
| | BASE TIME 2:00 MINUTES | YES | A/M MANUAL | 1 | 2:00 | 375 F / 190 C | HIGH | NO | 10:00 | 1 | 0 | 120 |
| | | | | | | | | | | 2 | 0 | 120 |
| | | | | | | | | | | 3 | 0 | 120 |
| | | | | | | | | | | 4 | 0 | 120 |
| | | | | | | | | | | 5 | 0 | 120 |
| BUTTON 5 BOUTON 5 | MCGRIDDLES | ENABLED | CANCEL | NUMBER OF STAGES | COOK TIME | COOK TEMP | FAN SPEED | COOLING TIMER | COOLING TIME | SFACTOR | VALUE | TIME |
| | BASE TIME 6:00 MINUTES | YES | A/M MANUAL | 1 | 6:00 | 375 F / 190 C | HIGH | NO | 10:00 | 1 | 0 | 120 |
| | | | | | | | | | | 2 | 0 | 120 |
| | | | | | | | | | | 3 | 0 | 120 |
| | | | | | | | | | | 4 | 0 | 120 |
| | | | | | | | | | | 5 | 0 | 120 |
| BUTTON 6 BOUTON 6 | MUFFINS | ENABLED | CANCEL | NUMBER OF STAGES | COOK TIME | COOK TEMP | FAN SPEED | COOLING TIMER | COOLING TIME | SFACTOR | VALUE | TIME |
| | BASE TIME 48:00 MINUTES | YES | A/M MANUAL | 1<br>2<br>3 | 0:30<br>22:00<br>25:30 | 380 F / 193 C<br>305 F / 152 C<br>320 F / 160 C | LOW<br>LOW<br>LOW | NO | 10:00 | 1 | 0 | 120 |
| | | | | | | | | | | 2 | 0 | 120 |
| | | | | | | | | | | 3 | 0 | 120 |
| | | | | | | | | | | 4 | 0 | 120 |
| | | | | | | | | | | 5 | 0 | 120 |
| BUTTON 7 BOUTON 7 | PASTRIES | ENABLED | CANCEL | NUMBER OF STAGES | COOK TIME | COOK TEMP | FAN SPEED | COOLING TIMER | COOLING TIME | SFACTOR | VALUE | TIME |
| | BASE TIME 19:55 MINUTES | YES | A/M MANUAL | 1<br>2<br>3 | 0:10<br>6:30<br>13:15 | 375 F / 190 C<br>250 F / 121 C<br>350 F / 177 C | LOW<br>LOW<br>LOW | NO | 10:00 | 1 | 0 | 120 |
| | | | | | | | | | | 2 | 0 | 120 |
| | | | | | | | | | | 3 | 0 | 120 |
| | | | | | | | | | | 4 | 0 | 120 |
| | | | | | | | | | | 5 | 0 | 120 |
| BUTTON 8 BOUTON 8 | CURRENTBAGEL | ENABLED | CANCEL | NUMBER OF STAGES | COOK TIME | COOK TEMP | FAN SPEED | COOLING TIMER | COOLING TIME | SFACTOR | VALUE | TIME |
| | BASE TIME 5:00 MINUTES | YES | A/M MANUAL | 1<br>2 | 0:20<br>4:40 | 375 F / 190 C<br>350 F / 177 C | LOW<br>LOW | NO | 10:00 | 1 | 0 | 120 |
| | | | | | | | | | | 2 | 0 | 120 |
| | | | | | | | | | | 3 | 0 | 120 |
| | | | | | | | | | | 4 | 0 | 120 |
| | | | | | | | | | | 5 | 0 | 120 |
| BUTTON 9 BOUTON 9 | LTO | ENABLED | CANCEL | NUMBER OF STAGES | COOK TIME | COOK TEMP | FAN SPEED | COOLING TIMER | COOLING TIME | SFACTOR | VALUE | TIME |
| | BASE TIME 0:00 MINUTES | NO | A/M MANUAL | 1 | 0:00 | 375 F / 190 C | HIGH | NO | 10:00 | 1 | 0 | 120 |
| | | | | | | | | | | 2 | 0 | 120 |
| | | | | | | | | | | 3 | 0 | 120 |
| | | | | | | | | | | 4 | 0 | 120 |
| | | | | | | | | | | 5 | 0 | 120 |
| BUTTON 0 BOUTON 0 | LTO | ENABLED | CANCEL | NUMBER OF STAGES | COOK TIME | COOK TEMP | FAN SPEED | COOLING TIMER | COOLING TIME | SFACTOR | VALUE | TIME |
| | BASE TIME 0:00 MINUTES | NO | A/M MANUAL | 1 | 0:00 | 375 F / 190 C | HIGH | NO | 10:00 | 1 | 0 | 120 |
| | | | | | | | | | | 2 | 0 | 120 |
| | | | | | | | | | | 3 | 0 | 120 |
| | | | | | | | | | | 4 | 0 | 120 |
| | | | | | | | | | | 5 | 0 | 120 |

# NOTES

## WIRING DIAGRAM

208 V and 240 V single phase

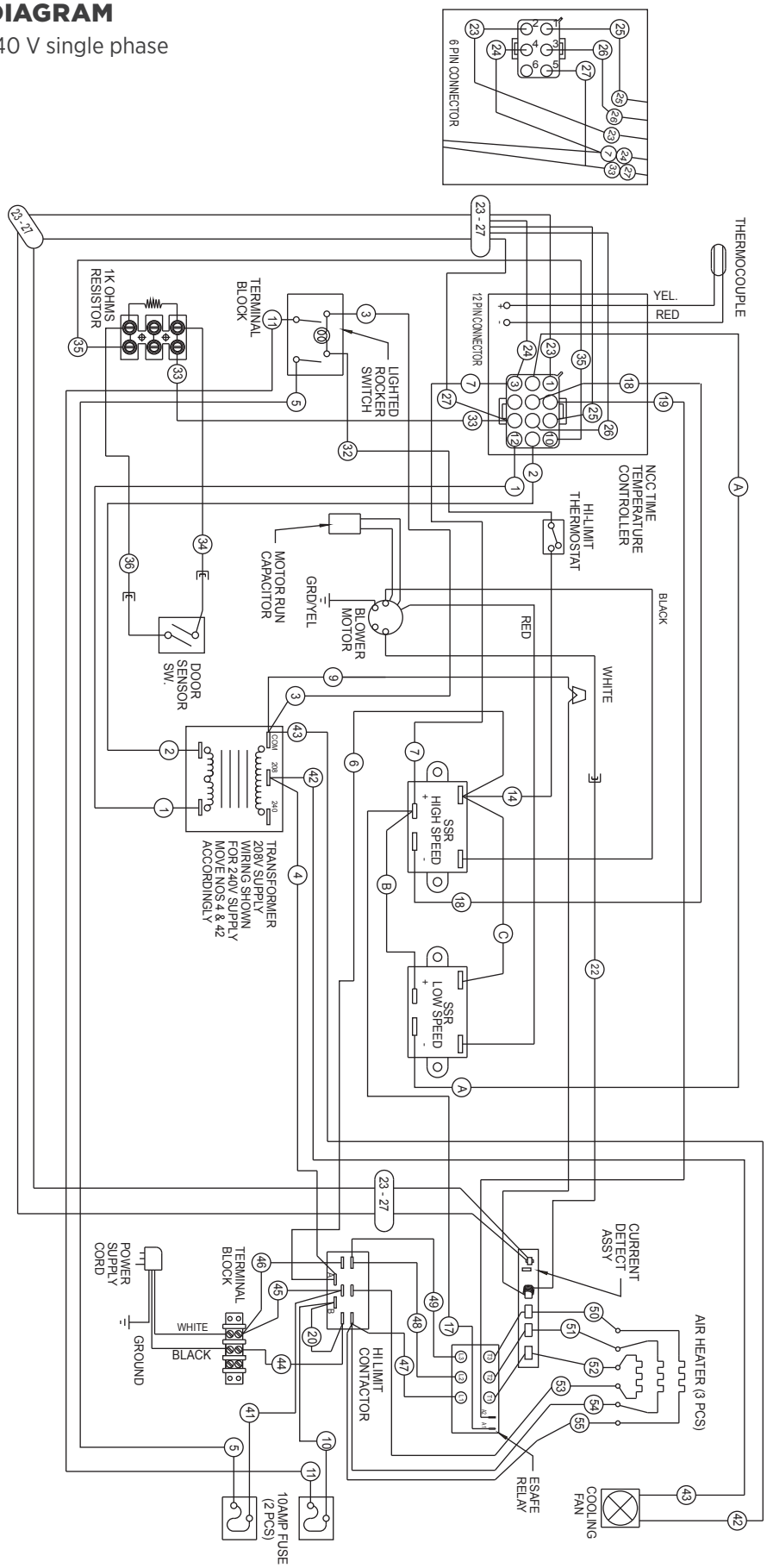

## WIRING DIAGRAM

208 V and 240 V three phase [delta]

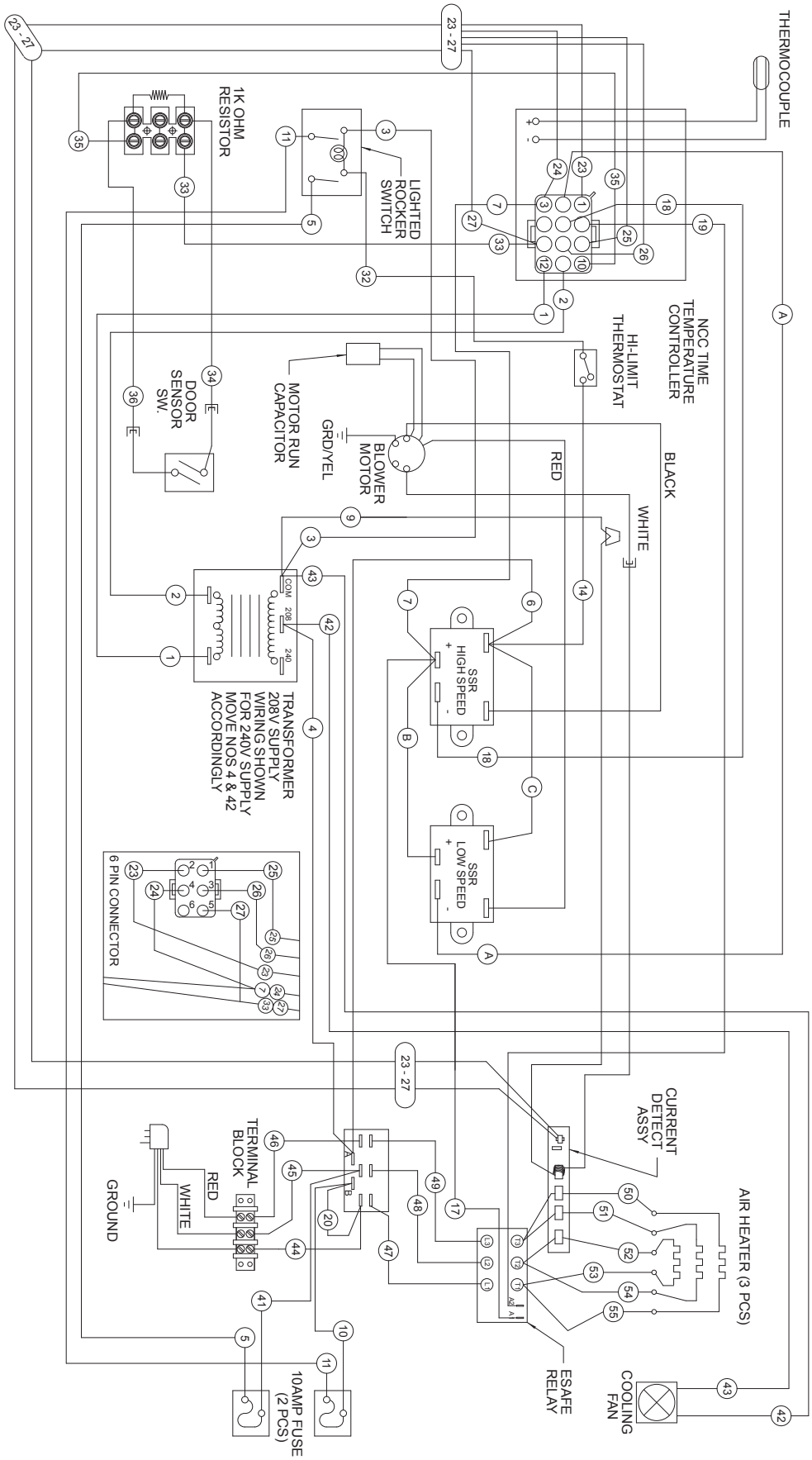

## WIRING DIAGRAM

230 V three phase [wye]

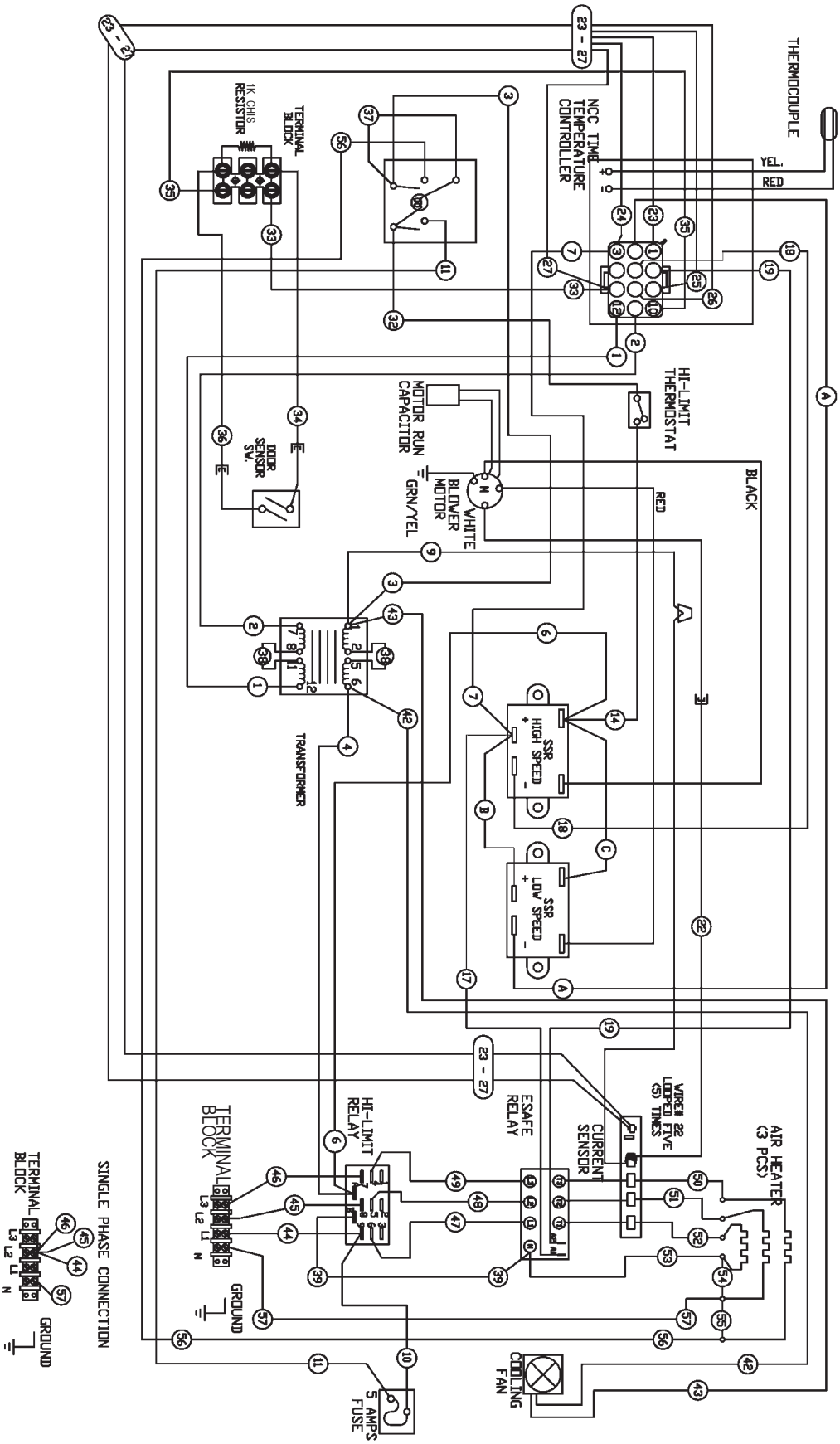

## HINGE ADJUSTMENT

ALLOW THE UNIT TO COOL COMPLETELY BEFORE PERFORMING ADJUSTMENT PROCEDURE.

### TOOLS REQUIRED

- **i.** Phillips screwdriver
- **ii.** 7/16 in. nut driver
- **iii.** 7/8 in. open end wrench
- **iv.** 1-1/8 in. open end wrench
- **v.** tape measure or other measuring device [optional]

### ADJUSTMENT PROCEDURE

This procedure should only be performed by qualified personnel only. The door can be adjusted on the lower left in order to affect its level, plumb, and height relative to the frame.

- **i.** Begin by checking the door to determine what adjustments need to be made.
- **ii.** Remove the lower, front trim.
- **iii.** If the gaps between the top and the bottom of the door relative to the frame are not approximately equal, the height will need to be adjusted. Begin by loosening jamb nut, then turn the shaft clockwise to lower the door and counterclockwise to raise the door. Adjust until the door is level, then tighten the jamb nut when finished.
- **iv.** Looking at the left side of the oven, if the gap between the door and the frame is not equal at the top and bottom of the door, the plumb of the door will need to be adjusted. Begin adjusting the door by loosening the holding screws on either side of the adjusting bolt. Next, turn the adjusting bolt to clockwise to increase the gap or counterclockwise to decrease the gap at bottom of the door. Once the bottom gap is equal to the top, tighten the holding screws back in place.
- **v.** If the gap between the top of door and the frame is not even from side to side, the level of the door will require adjustment. In order to adjust, loosen the holding screws, then raise or lower right [latch] side of door until it is level. Tighten the holding screws once the door is level.
- **vi.** Once all adjustments are made, replace the front, lower trim.

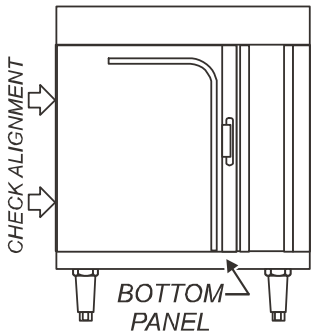


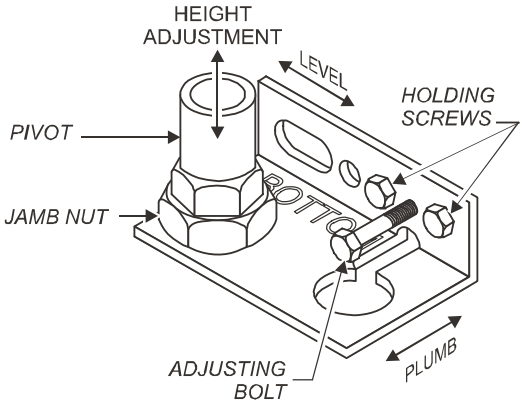

## EXPLODED VIEW

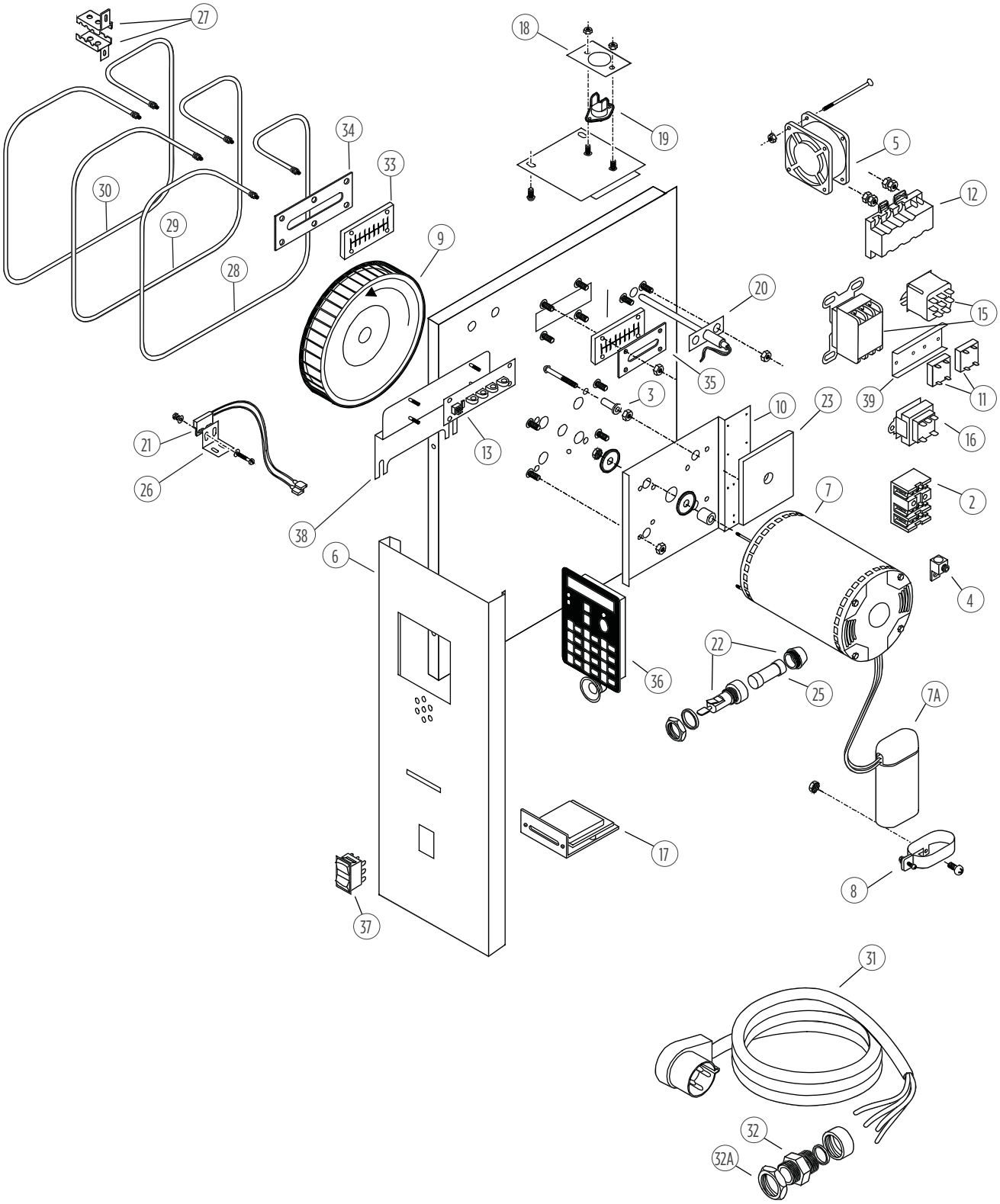

## EXPLODED VIEW

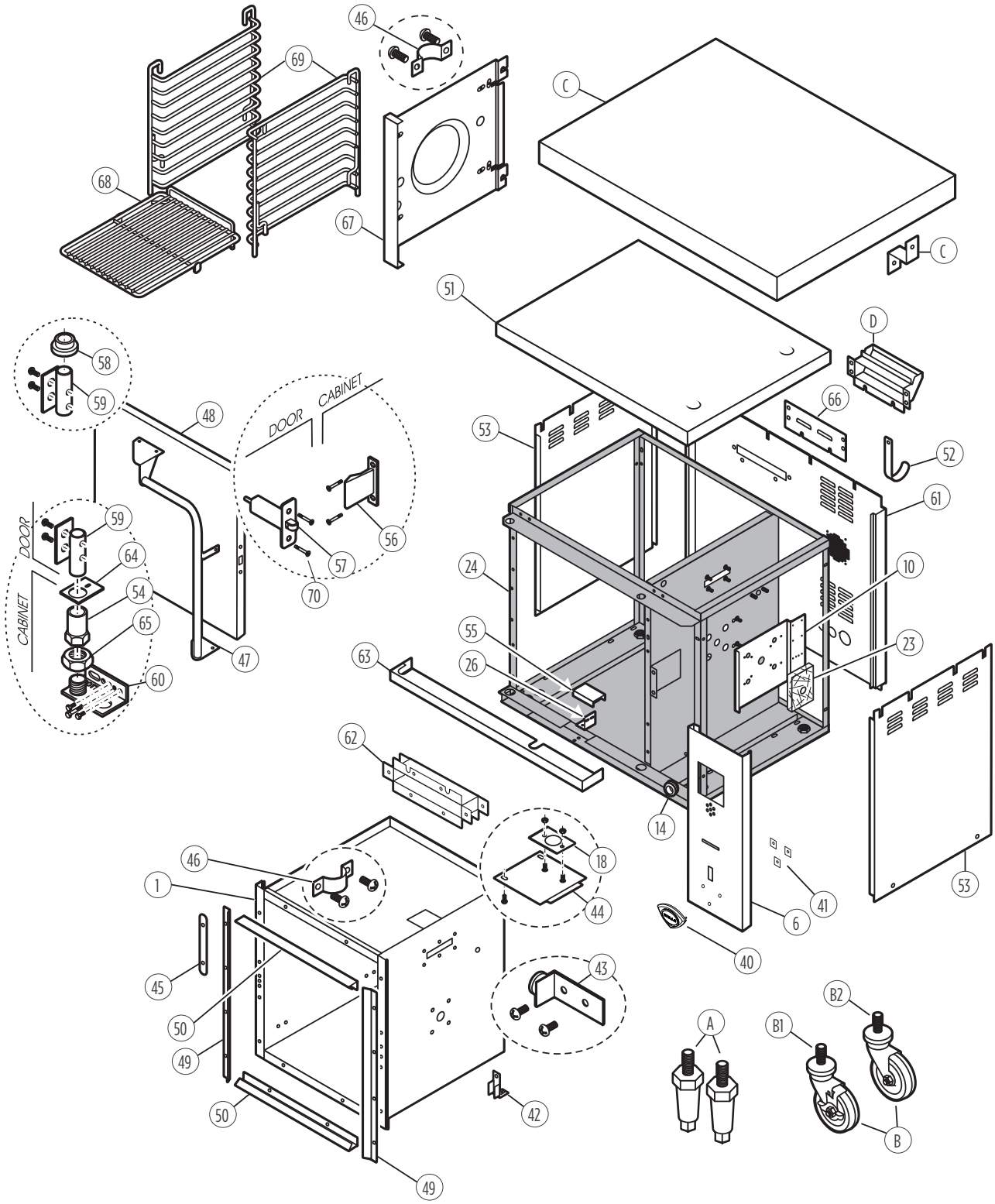

## PARTS LIST

| REF NO | PART NUMBER | MODEL | DESCRIPTION | QTY | PAGE NO |
|---|---|---|---|---|---|
| 1 | F6-304607 | All | cavity assembly (not serviceable) | 1 | 23 |
| 2 | 2E-75309 | All 208 V and 240 V | 3-pole terminal block | 1 | 22 |
| | 2E-40310 | 230 V [3 Φ wye] | 4-pole terminal block | | |
| 3 | 2A-45199 | All | blower motor spacer | 4 | 22 |
| 4 | 2C-307288 | All 208 V and 240 V | solderless ground lug | 4 | 22 |
| | | 230 V [3 Φ wye] | | 1 | |
| 5 | 2U-44687 | All | cooling fan | 1 | 22 |
| 6 | F6-Z15736 | All | control mounting panel | 1 | 22, 23 |
| 7 | 2U-Z13533 | All | motor with capacitor [serviced as kit WS-63932] | 1 | 22 |
| 7A | WS-63932 | All | capacitor [service kit] | 1 | 22 |
| 8 | 2V-300933 | All | capacitor bracket | 2 | 22 |
| 9 | 2U-43797 | All | blower wheel | 1 | 22 |
| 10 | F6-307326 | All | motor mount bracket | 1 | 22, 23 |
| 11 | 2E-304615 | All | solid state relay | 2 | 22 |
| 12 | 2E-306967 | All 208 V and 240 V | e-safe relay | 1 | 22 |
| | 2E-306967A | 230 V [3 Φ wye] | | | |
| 13 | 2E-306976 | All | current detector | 1 | 22 |
| 14 | 2K-31040 | All | 0.875 in. heyco bushing | 2 | 23 |
| 15 | 2E-Z14960 | All 208 V and 240 V [1 Φ] | contactor | 1 | 22 |
| | 2E-307328 | 240 V [3 Φ delta] and 230 V [3 Φ wye] | relay | 1 | 22 |
| 16 | 2E-Z5741 | All 208 V and 240 V | transformer | 1 | 22 |
| | 2E-303286 | 230 V [3 Φ wye] | | | |
| 17 | 2E-306977 | All | card reader | 1 | 22 |
| 18 | F6-45668 | All 208 V and 240 V | hold-down bracket for high-limit thermostat | 1 | 22, 23 |
| 19 | 2T-45180 | All 208 V and 240 V | high-limit thermostat | 1 | 22 |
| 20 | 2J-304580 | All | probe thermocouple | 1 | 22 |
| 21 | F6-45239 | All | proximity switch | 1 | 22 |
| 22 | 2E-34769 | All 208 V and 240 V | fuseholder | 2 | 22 |
| | 2E-73795W | 230 V [3 Φ wye] | | 1 | |
| 23 | 2H-305520 | All | motor insulation | 1 | 22, 23 |
| 24 | F6-304609 | All | frame assembly [not serviceable] | 1 | 23 |
| 25 | 2E-34768 | All 208 V and 240 V | 10 A fuse | 2 | 22 |
| | 2E-73794W | 230 V [3 Φ wye] | 5 A fuse | 1 | |
| 26 | F6-43787 | All | proximity switch bracket | 1 | 22, 23 |
| 27 | F6-43829 | All | element bracket | 6 | 22 |
| 28 | 2N-43872UL | All 208 V | inner heating element [4 in. (102 mm) gap] | 1 | 22 |
| | 2N-43783UL | All 230 V and 240 V | | | |
| 29 | 2N-43866UL | All 208 V | center heating element [2.5 in. (64 mm) gap] | 1 | 22 |
| | 2N-43800UL | All 230 V and 240 V | | | |
| 30 | 2N-43873UL | All 208 V | outer heating element [1 in. (25 mm) gap] | 1 | 22 |
| | 2N-43949UL | All 230 V and 240 V | | | |

| REF NO | PART NUMBER | MODEL | DESCRIPTION | QTY | PAGE NO |
|---|---|---|---|---|---|
| 31 | F6-WL0306 | M42004-2081A<br>M42004-2401A | cordset assembly | 1 | 22 |
| | F6-WL0734 | M42004-2081B<br>M42004-2401B | | | |
| | F6-WL0736 | M42004-2081C<br>M42004-2401C | | | |
| | F6-WL0733 | M42004-2083A<br>M42004-2403A | | | |
| | F6-WL0735 | M42004-2083B<br>M42004-2403B | | | |
| | 2E-45177 | M42004-2083C<br>M42004-2403C | | | |
| 32 | 2K-48754 | All 208 V and 240 V | strain relief bushing | 1 | 22 |
| | 2K-300102 | 230 V [3 Φ wye] | | | |
| 32A | 2C-45504 | All 208 V and 240 V | strain relief nut only | 1 | 22 |
| 33 | 2I-43834 | All | element gasket | 2 | 22 |
| 34 | F6-43836 | All | element gasket inner cover | 1 | 22 |
| 35 | F6-43837 | All | element gasket outer cover | 1 | 22 |
| 36 | 2J-Z21861 | U.S.A. menu models | control board | 1 | 22 |
| | 2J-Z22527 | Canada menu models | | | |
| 37 | 2E-305295 | All 208 V and 240 V | on/off power switch | 1 | 22 |
| | 2E-306824 | 230 V [3 Φ wye] | | | |
| 38 | F6-304717 | All | current detector bracket | 1 | 22 |
| 39 | F6-Z20016 | All | solid state relay mounting bracket | 1 | 22 |
| 40 | 2M-306719 | All | Wells badge | 1 | 23 |
| 41 | 2C-31038 | All | tinnerman clip | 3 | 23 |
| 42 | F6-45015 | All | cavity support bracket | 2 | 23 |
| 43 | F6-43876 | All | baffle support assembly | 2 | 23 |
| 44 | F6-304608 | All | temperature sensor mount | 1 | 23 |
| 45 | F6-46519 | All | door cover gasket | 4 | 23 |
| 46 | F6-43889 | All | rack support clip | 8 | 23 |
| 47 | 2R-305612 | All | handle assembly | 1 | 23 |
| 48 | F6-304652 | All | complete door assembly | 1 | 23 |
| 49 | F6-46313 | All | door side gasket | 2 | 23 |
| 50 | F6-46314 | All | door upper/lower gasket | 2 | 23 |
| 51 | F6-43788 | All | oven top panel | 1 | 23 |
| 52 | F6-43827 | All 1 Φ<br>M42004-2083C<br>M42004-2403C | cord hanger | 1 | 23 |
| 53 | F6-49626 | All | side panel | 2 | 23 |
| 54 | 2A-43900 | All | door hinge sleeve | 1 | 23 |
| 55 | F6-45647 | All | proximity switch guard | 1 | 23 |
| 56 | 2C-305616 | All | latch striker | 1 | 23 |

| REF NO | PART NUMBER | MODEL | DESCRIPTION | QTY | PAGE NO |
|---|---|---|---|---|---|
| 57 | 2C-305615 | All | latch assembly | 1 | 23 |
| 58 | 2K-305619 | All | upper door hinge bushing | 1 | 23 |
| 59 | 2A-305610 | All | door hinge pin | 2 | 23 |
| 60 | F6-43896 | All | bottom door hinge assembly | 1 | 23 |
| 61 | F6-305510 | All | rear panel | 1 | 23 |
| 62 | F6-305511 | All | vent coupler assembly | 1 | 23 |
| 63 | F6-43804 | All | lower, front trim | 1 | 23 |
| 64 | F6-43899 | All | door pivot plate | 1 | 23 |
| 65 | 2C-44363 | All | 3/4-10 jam nut | 1 | 23 |
| 66 | F6-305523 | All | biscuit plate adapter | 1 | 23 |
| 67 | F6-44504 | All | oven baffle | 1 | 23 |
| 68 | 2B-50200-34 | All | product rack | 3 | 23 |
| 69 | 2B-43785 | All | rack support | 2 | 23 |
| 70 | 2C-35492 | All | #8-32 x 0.5 in. screw | 2 | 23 |
| **OPTIONAL ACCESSORIES [AVAILABLE AT ADDITIONAL COST]** | | | | | |
| **REF NO** | **PART NUMBER** | **APPLICABLE MODEL[S]** | **DESCRIPTION** | **QTY REQUIRED PER OVEN [OR STACKED PAIR OF OVENS]** | |
| A | WS-22829 | All | 6 in. (152 mm) leg set [contains 2 legs] | 2 | |
| B | WS-21330 | All | full caster set [contains B1 and B2] | 1 | |
| B1 | WS-21373 | | locking caster [2 quantity for front of unit] | 1 | |
| B2 | WS-21372 | | swivel caster [2 quantity for rear of unit] | 1 | |
| C | WS-21445 | All | prep top kit [includes hardware] | 1 | |
| D | WS-505504 | All | vent kit [for use with proteins, for single oven] | 1 | |
| **NOT PICTURED** | | | | | |
| E | DD-22882 | All | stacking kit | 1 | |

## OPTIONAL EQUIPMENT SETUP

ALLOW THE UNIT TO COOL COMPLETELY BEFORE PERFORMING ANY SERVICE OR MAINTENANCE.

MAKE CERTAIN THE OVEN IS PROPERLY SUPPORTED DURING ANY INSTALLATION WHICH REQUIRES THE OVEN TO BE RAISED OFF ITS BASE OR TO SIT ON ITS SIDE SO THE BASE MAY BE EASILY ACCESSED.

SERVICE/INSTALLATION PROCEDURES SHOULD BE PERFORMED BY AUTHORIZED TECHNICIANS ONLY.

THE OVEN SHOULD BE DISCONNECTED FROM POWER BEFORE ANY SERVICE PROCEDURE.

### CASTER KIT [WS-21330]

i. Reposition the oven so that the bottom can be easily and safely accessed.
ii. Install the casters into the oven. The locking casters have to go in the front two [2] positions. The non-locking casters go in the back two [2] positions.
iii. Set the unit upright, on the casters, and move the unit to its desired destination.
iv. Check that the unit is level form side to side as well as front to back and make adjustments to the casters as necessary.

### LEG KIT [WS-22829]

i. Reposition the oven so that the bottom can be easily and safely accessed.
ii. Adjust the legs to be approximately the same height and install the legs into the oven.
iii. Set the unit upright, on the legs, and move the unit to its desired destination.
iv. Check that the unit is level form side to side as well as front to back and make adjustments to the legs as necessary.

### VENT KIT [WS-505504]

i. Remove the two [2] screws holding the top of the vent plate on the rear, left of the oven.
ii. Loosen, but do not remove, the lower two [2] screws and remove the vent plate.
iii. Slide the lower flange of the vent kit adapter over the two [2] loosened screws.
iv. Place the two [2] top screws back in place and tighten all four [4] screws.
v. Attach the vent adapter to an appropriate ventilation system based on all codes and regulations pertaining to the installation location.

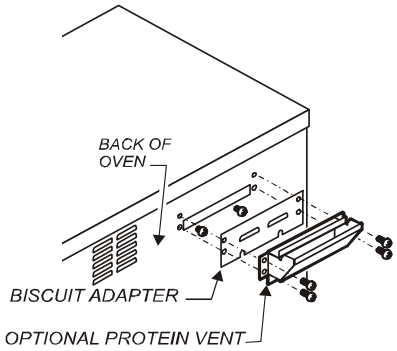


### PREP TOP KIT [WS-21445]

i. Attach the four [4] mounting brackets to the prep top with the four [4] supplied mounting screws. Snug the screws, but do not fully tighten.
ii. Remove the four [4] screws that attach the oven top panel.
iii. Carefully place the prep top over the top of the oven and place the four [4] screws that were removed from the oven top panel through the bracket holes, then thread them into their original positions.
iv. Making certain the prep top is level, tighten all eight [8] screws.

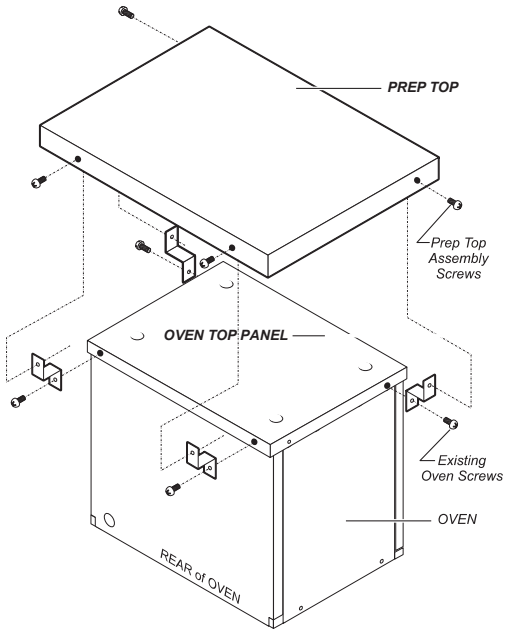

**WELLS MANUFACTURING** • www.wells-mfg.com
265 Hobson Street • Smithville, Tennessee 37166
Telephone 888 356 5362 • Fax 314 781 5445

Printed in the U.S.A. • 2M-Z19624 • Rev C • 02.2018
Specifications are subject to change without notice.